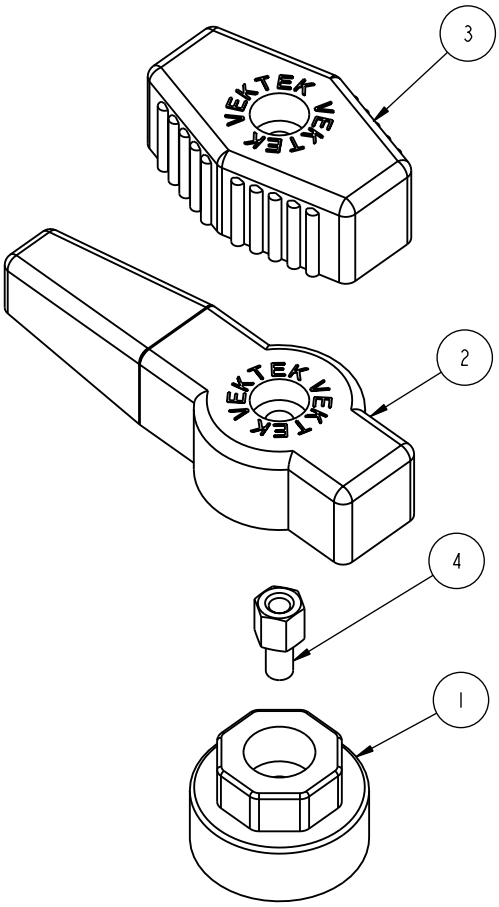

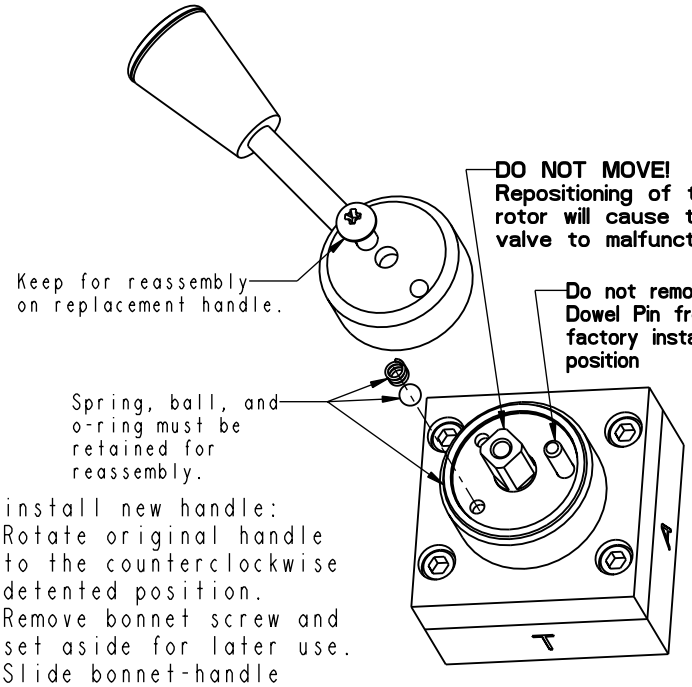

To install new handle:

1. Rotate original handle to the counterclockwise detented position.
2. Remove bonnet screw and set aside for later use.
3. Slide bonnet-handle assembly off of rotor shaft.
4. Retrieve ball, spring, and o-ring for reassembly.
5. Coat spring and ball with lithium grease. Insert spring into adapter hole. Set ball in original detent hole- do not relocate.
6. Install adapter in place of bonnet (o-ring must be in position) and tighten, using item 4.
7. Install replacement handle on to the adapter, in the position required.
8. Insert original bonnet screw & tighten.

No.	QTY	PART No.	DESCRIPTION
4	1	85600904	SCREW, ADAPTER, HANDLE, VALVE
3	1	85600903	HANDLE, VALVE, SHORT
2	1	85600902	HANDLE, VALVE, LONG
1	1	85600901	ADAPTER, HANDLE, VALVE

PARTS LIST

VEKTEK®
VEKTEK, INC.
1334 E. SIXTH AVE. P.O. BOX 625
EMPORIA, KS. 66801 U.S.A.

REV	IN ACCORDANCE WITH ECN	EFFECTIVE DATE	REVISED BY	DATE
A	2150	RELEASE	MES	03-22-10

DRW BY: MES
DATE: 03-22-10

DRAWING STATUS: **Released**
PRODUCTION APPROVED FOR RELEASED STATUS ONLY

Model Number 62-7004-08

PARTS LIST, KIT, HANDLE, VALVE

SIZE A | PL-6202 | REV A

SHEET 1 OF 1

FORM FEG035_PL_ASIZE, REV. A

@ Copyright 1986-2026 by Vektek LLC*** ***See Vektek.com>Resources>Literature>Special Maintenance & Production Tools